DIMENSIONS

OPERATION:

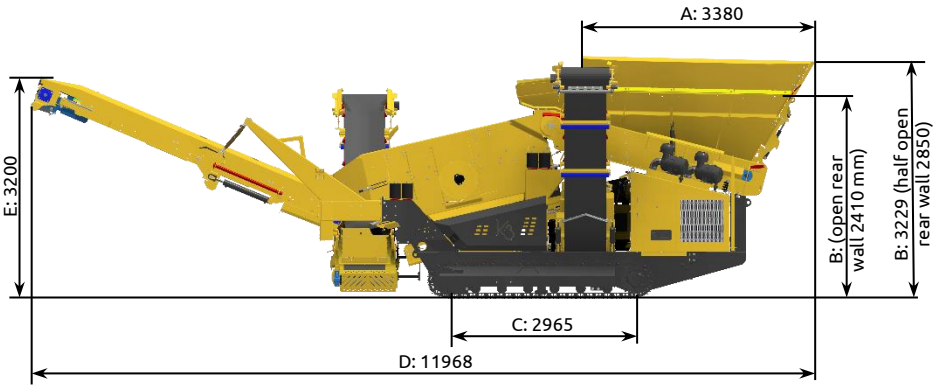

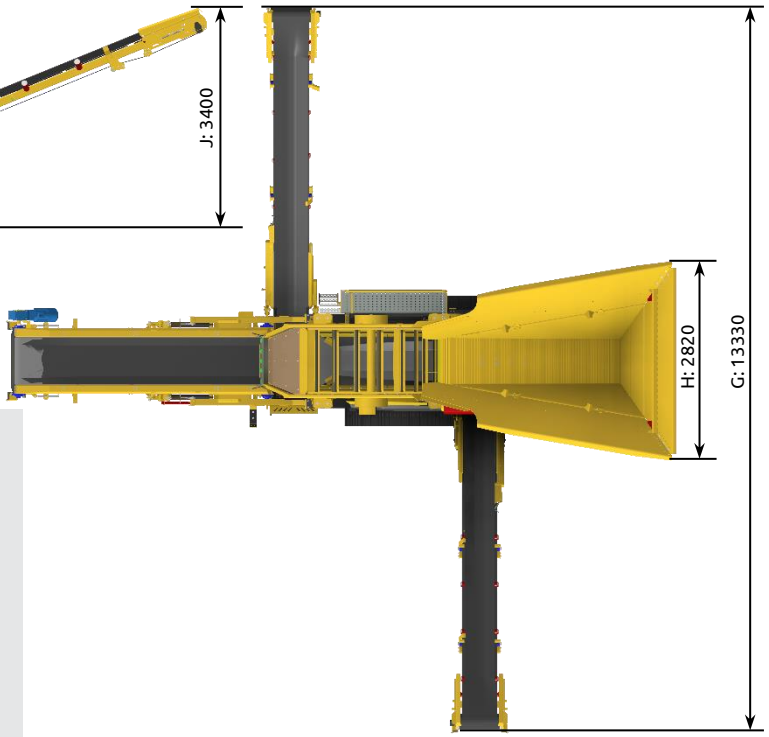

Weight: approx. 17,5 t (without options)

Weight options:

Magnetic separator 10 KT FE ELE	+	approx.	1.110 kg
Hopper wall extension	+	approx.	400 kg

Transport width **2.550 mm (8`4")**

TRANSPORT:

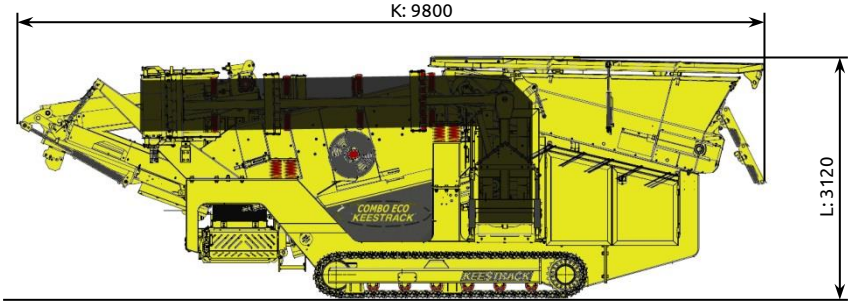

REMARK: All pictures might show options, not included in the scope of supply

A	B	C	D	E	F	G	H	I	J	K	L
3380	3229	2965	11869	3200	3280	13330	2820	2550	3400	9800	3120
11'1"	10'7"	9'9"	38'11"	10'6"	10'9"	43'9"	9'3"	8'4"	11'2"	32'2"	10'3"